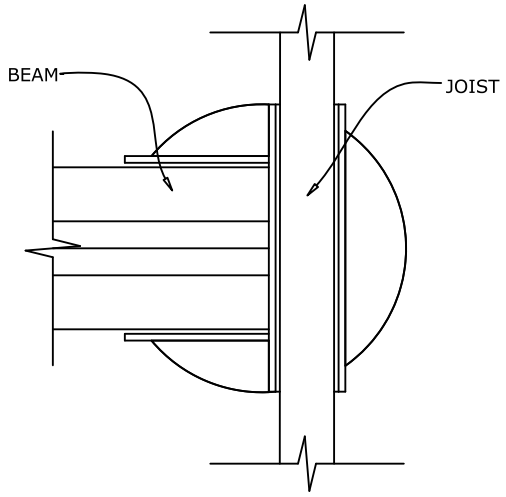

SIDE VIEW

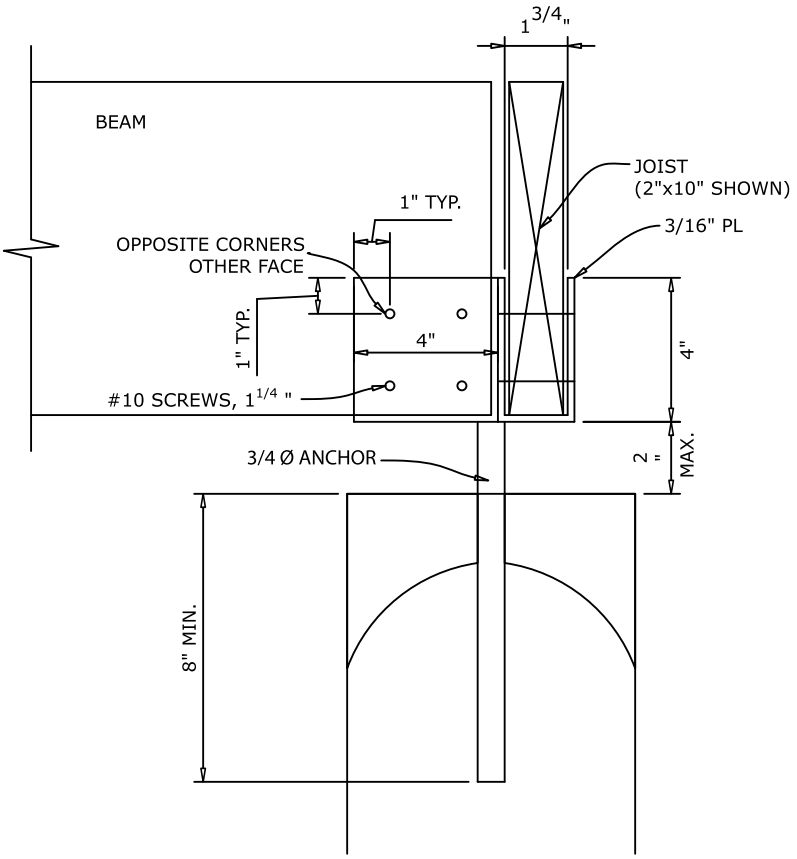

SECTION VIEW

DETAIL 3 - 3 WAY CONNECTION

FIG. 5